AMEWI

PITBULL X evolution

INSTRUCTION MANUAL

Declaration of Conformity

This product has been manufactured according to actual technical standards. The product is matching the requirements of the existing European and national guidelines. The Declaration of conformity has been proofed. AMEWI Trade e.K. declares that this product is matching the basic requirements and remaining regulations of the guideline 2014/53/EU (RED).
The declarations and documents are stored at the manufacturer and can be requested and applied there.

The full text of the declaration of conformity can be found at: https://amxracing.de

For additional questions to the product and conformity please contact:
Amewi Trade e.K., Nikolaus-Otto-Str. 18, DE-33178 Borchen, Fax: +49 5251 28896519, E-Mail: info@amewi.com

Security and Hazard Warnings

Attention! For damage, caused by disregarding of the manual, warranty expires!
We are not liable for secondary failures, material or personal damage, caused by improper usage or disregarding the security notices!
Attention! Based on security and registration (CE) reasons, it is forbidden to modify the product personally. Do not disassemble the product.
Attention! Small parts. Danger of suffocation or risk of injury caused by small parts.
Attention! Suitable for people aged 14+!
The product is not allowed to get moist or wet. Even a drop down from a small height can cause damage to the product.

Battery Notice and Battery Disposal

Attention! Battery do not belong in children's hands. A change of the battery must be done by an adult person. Never mix chargeable batteries with non-chargeable batteries. Never mix fully charged batteries with almost empty batteries. Never mix batteries of different capacity. Never try to charge dry batteries. Take care of the correct polarity. Defective batteries belong to special waste. Never leave a charging battery unattended. For questions about the charging time please read the manual or ask the manufacturer.

Disposal

The company AMEWI is registered below WEEE Reg. No. DE93834722 at the foundation EAR and recycles all used electronic parts properly. Electric and electronical products are not allowed to put in household garbage. Please dispose the product at the end of the lifetime according to the actual laws. You as a customer are responsible by law for the return of all batteries, a disposal over the household garbage is forbidden!
batteries containing hazardous substances are marked with alongside symbol, which point to the prohibition of disposal in household garbage.
Additional notations for the critical heavy metal are Cd=cadmium, Hg=quicksilver, Pb=lead

RoHS 2011/65/EU

Based on RoHS labelling the manufacturer confirms, that all limit values were taken care of the time of manufacturing.

GEMEINSAMES RÜCKNAHME SYSTEM

Batteries labelled with the recycling symbol can be put into used battery collecting tank. (Most supermarkets have) They are not allowed to be put into local household garbage.

LANDBELL®

AMEWI Trade e.K. is involved in the dual system for boxing over the company Landbell AG. All used boxes are collected from partner companies (waste disposal contractor) at private customers (local household), sorted and properly utilized. The involvement in a Dual Systems helps to save CO^2 emissions.

Please read this manual carefully and keep it for further questions.

SPECIFICATIONS

Length	825mm
Width	480mm
Height	270mm
Wheelbase	610mm
Gear Ratio	1:9,6
Ground clearance	55mm
Weight	12,5kg
Wheel diameter front	
Wheel diameter rear	
Wheel width front	
Wheel width rear	
Engine	27ccm CY
Tank	700ml
Steering Servo	
Throttle Servo	
Drive	2WD
Transmitter	2,4GHz GT2
Battery	2500mAh

REQUIRED ACCESSORIES

Allen key
1,5/2,0/2,5/3,0/4,0/5,0

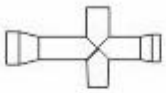

small cross wrench

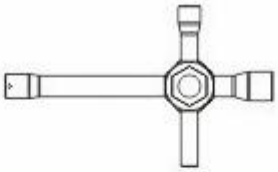

Big cross wrench

Hex socket wrench
16/23

Knife

Scissor

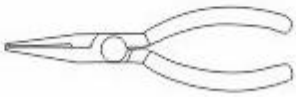

Nose pliers

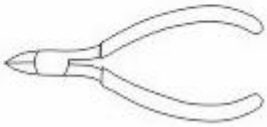

Side cutter

CHASSIS

TRANSMITTER

Front view

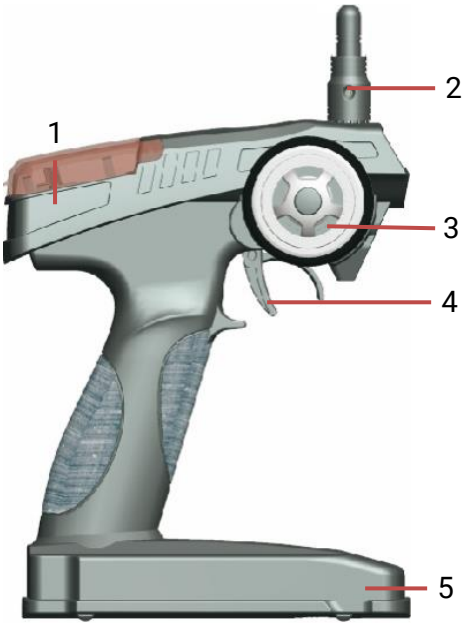

Rear view

Top view

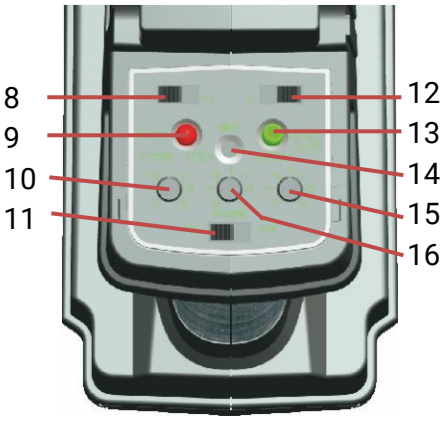

1. Cover for adjustment elements
2. Antenna
3. Steering wheel
4. Throttle trigger
5. Battery box
6. Charging socket
7. Simulator socket
8. Steering reverse switch
9. Power LED
10. Steering trim
11. On-/Off switch
12. Throttle/Breake reverse switch
13. Batterie-LED
14. Bind switch
15. Throttle trim
16. Dual rate function

ADJUSTMENT

Dual rate function (16): With this control, the steering servo deflection can be set within the range of 30-100%. If the rash is higher, the steering also reacts more sensitively to the control signals.

Steering trim (10): with this control, the neutral point of the steering servo can be set.

Throttle trim (15): with this control, the neutral point of the throttle servo can be set.

Reverse function (8 & 12): with these switches you can reverse the steering and throttle servo.

INSERT THE BATTERIES

Insert 8x AA batteries in the batterie compartment. Please note the polarity.

IMPORTANT NOTES

- Never mix batteries and rechargeable batteries!
- Never mix full and half empty batteries!
- Do not mix batteries / rechargeable batteries of different manufacturers!
- Never mix batteries with different capacities!
- Never charge non-chargeable batteries!
- Always pay attention to the correct polarity!
- Never leave the batteries unattended while charging!
- Always open the battery compartment cover (heat generation) to charge!
- Dispose of defective batteries / dead batteries properly!

SAFETY NOTES

- Check the range of the remote control before starting
- Pay attention to the battery / battery warning light. Weak or dead batteries / rechargeable batteries can cause loss of control of the vehicle.
- On the stationary model (engine off), check that the servos are responding correctly to control signals.
- Make sure that the throttle- / brake servo is in neutral position.
- Do not drive under power lines or radio towers as this may interference with the transmission.
- Before starting the engine, check if the Fail-Safe setting is correct.
- Don’t switch off the transmitter when the engine is running

CONNECTION GRAPH

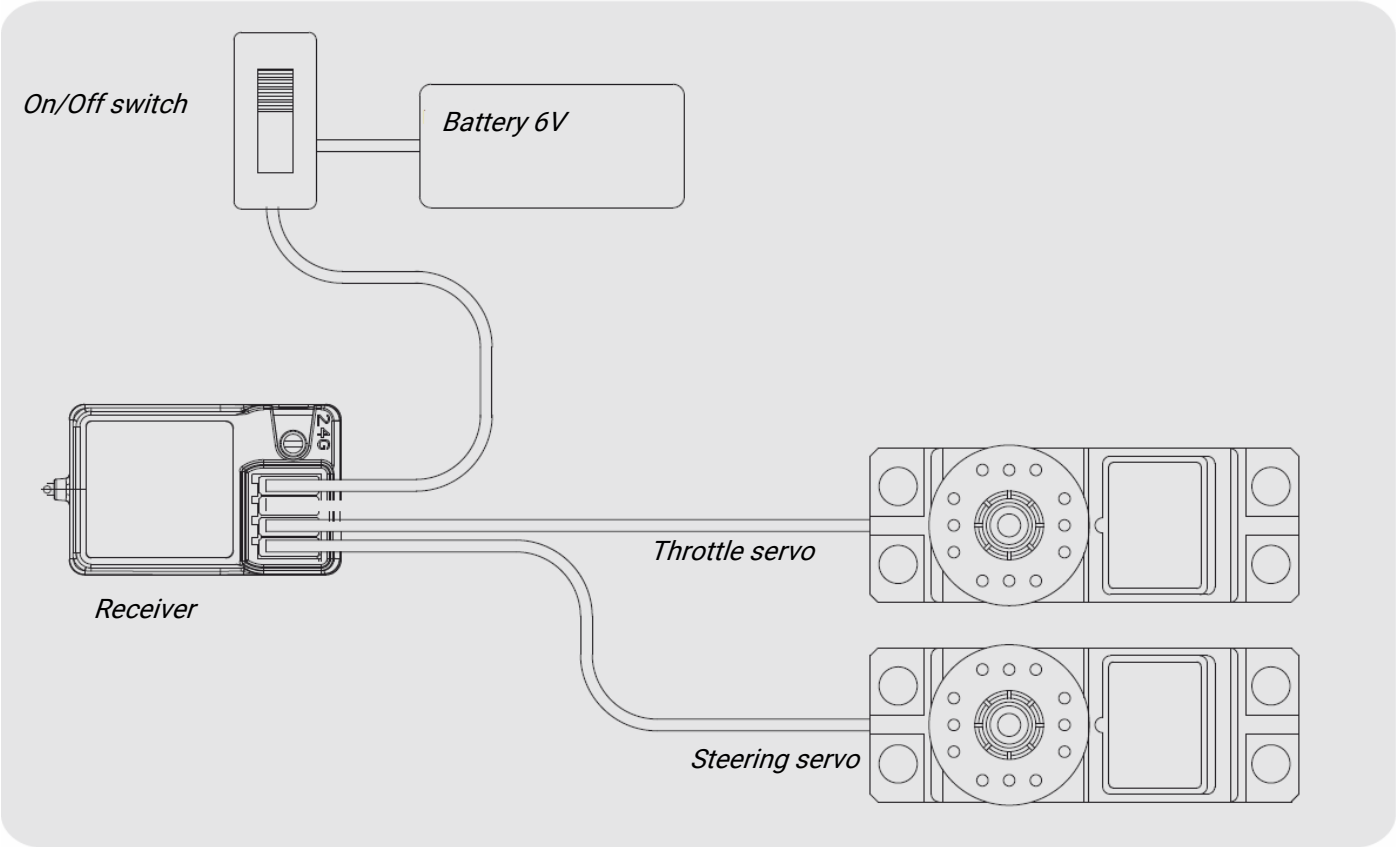

Terminal assignment of receiver:
CH1 – Steering servo, CH2 – Throttle servo, CH4 – Battery

BIND TRANSMITTER

Transmitter and receiver are already factory-matched and can be used immediately. A renewal of the binding is only necessary after a receiver or transmitter change or to remedy a mistake.

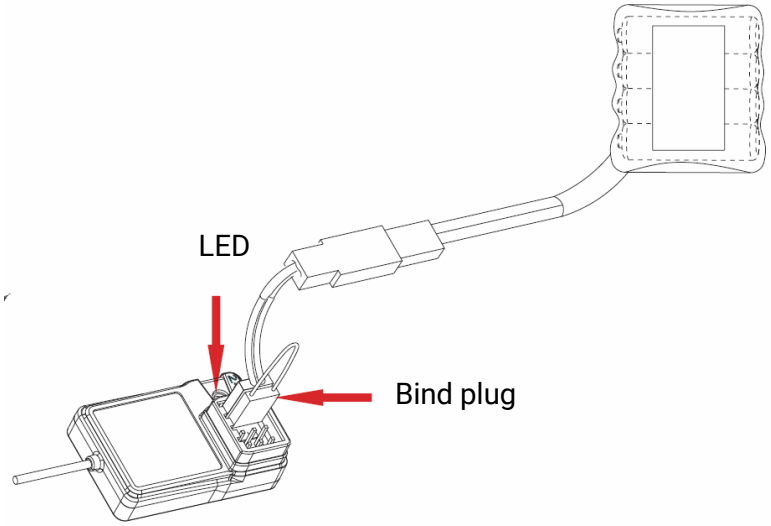

Proceed as follows:

1. Turn off the transmitter.
2. Plug the binding cable into the "Ch 3" socket on the receiver.
3. Connect the receiver battery to the receiver.
4. The LED on the receiver starts to flash
5. Press and hold the binding button on the transmitter while turning on the transmitter.
6. When the LED on the receiver stops flashing, the binding process is complete.
   This may take a few seconds Release the binding button on the transmitter and pull. Disconnect the binding cable from the receiver.
7. Check the function of the servo and the range of the remote-control system. If the servo does not respond correctly, repeat the process

FAIL SAFE / *FAIL SAFE*

The Fail-Safe function prevents that the in case of a signal loss, the car is out of control.
This function must be set before the first start and checked before every start.

Set Fail Safe:

1. Turn on transmitter
2. Connect battery to receiver
3. Check the connection.
4. Push the throttle trigger to the max position (full brake)
5. Press the set button on the receiver
6. The led flashes, the fail-safe is saved.

Please check the function. Turn off the transmitter. Now the throttle servo should automatically go to the braking position. If not, repeat the process.

CONSTRUCTION OF THE ENGINE

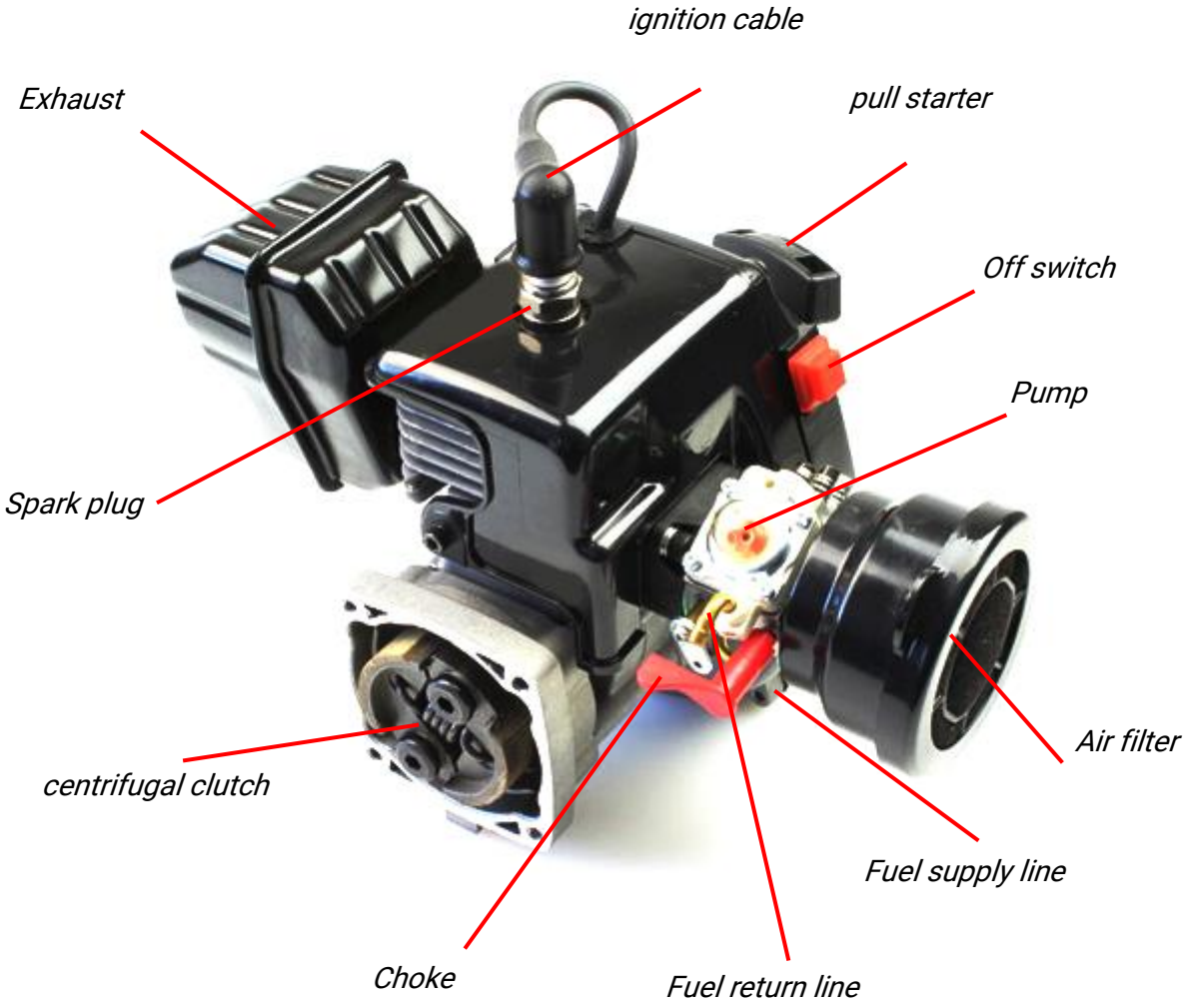

CARBURETTOR

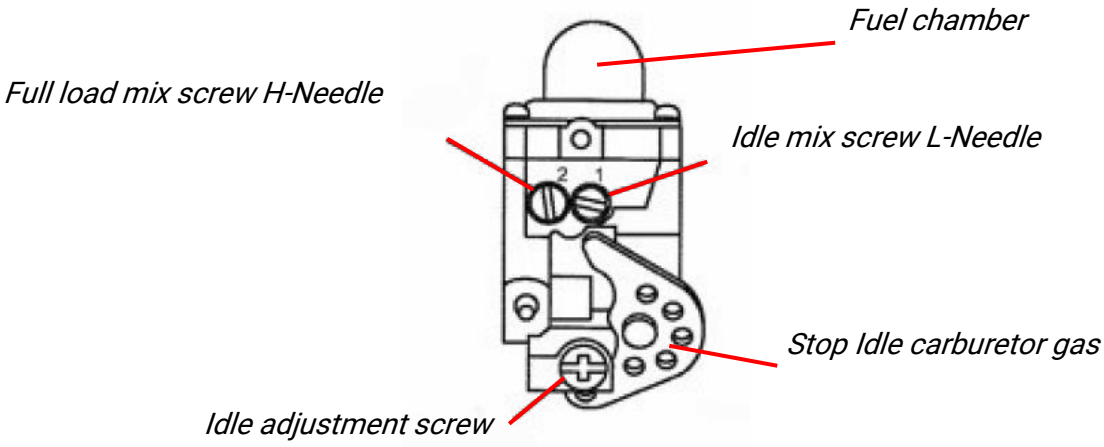

Full load mix screw H-Needle
Regulates the air-fuel mixture at full throttle.
Turning = "lean" setting (more air)
Turning off = "Faster" setting (more fuel)
In the default setting, the screw is turned out 1.5 turns.

Idle adjustment screw
The throttle stop screw regulates the position of the throttle valve and thus the air passage at idle. By screwing in, the conical tip of the screw pushes a lever on the axis of rotation of the throttle down and thus opens the gap. When unscrewing closes the throttle.

Idle mixture adjusting screw
Regulates the air-fuel mixture at idle
Turning = "lean" setting (more air)
Turning off = "Faster" setting (more fuel)
In the default setting, the screw is turned out 1.25 turns.

ENGINE RUNNING IN

Carburettor setting for intake chamfer:
Engine should be set quite fat and slow to get going, H needle to unscrew accordingly.
L needle also a millimetre thicker for slightly sluggish throttle response.
The inlet setting is therefore quite "fat", the engine is bubbling and babbling and needs a little until it comes to speed.
This setting, together with the mineral oil ensures an optimal run-in process. If full synthetic oil is used and / or the setting is too lean, piston drooling, and engine damage can be the result.
The engines may only be charged with full throttle during the initial run-up of the first few litres. It is important to pay attention to gas exchange and driving in all engine speed ranges.

START THE ENGINE

Screw in the idling stop screw completely.
At the transmitter throttle servo trimming (center adjustment) possibly give a little more gas.
(1-2mm, the idling stop comes standard with the idle adjustment screw).
Push choke lever (black or red plastic lever on carburettor) down (close).
Fuel chamber: Fill rubber bellows with your finger by pressing (gas is sucked in).
Pull the pull starter until the engine starts once (never pull the rope out until it stops!).
Open choke.
Pull the starter, engine is running.
If necessary, adjust the throttle trim on the transmitter.
Carry out any necessary intake settings on the carburettor.

PROBLEM: ENGINE DOES'N START

1. Turn all adjusting screws to factory settings. Check if the engine starts.
2. Turn the L needle slightly leaner (millimetre range). Check if the engine starts.
3. Repeat several times in the direction of leaner.
4. If this does not work, try the direction fatter.

   Keep full throttle needle to factory settings.

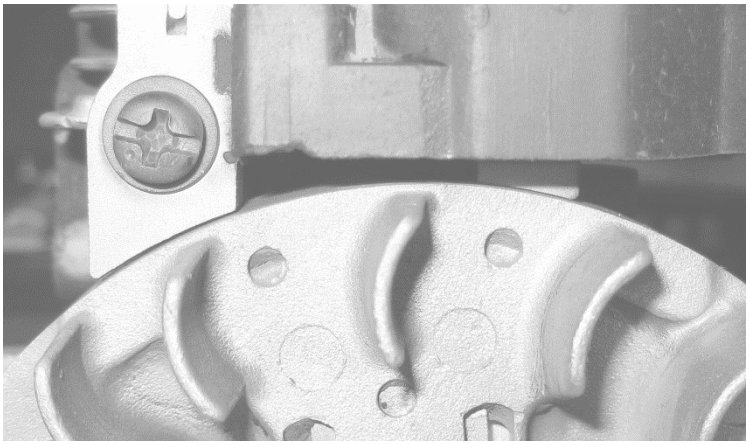

No Spark:
To check if the spark plug is working, disconnect the ignition wire from the top of the plug and unscrew the plug. Reconnect the ignition cable and hold the plug to the ground (metal motor housing). Only hold the plug by the rubber plug and do not touch any other component. (High voltage!). Now pull on the pull starter. Now you should see the sparks.
If this is not the case, check the distance between the magnet and the flywheel. To do this, the pull starter and the lateral motor housing must be removed.
The ignition coil sits above the flywheel. Check the gap distance. This should not be more than 0.3mm. For assembly, you can put a piece of paper in between. Then check that the flywheel does not drag.

RUN-IN STATE

After the engine runs in, use only 2-stroke fully synthetic oil (e.g. Motul 800 2-Stroke) in a mixing ratio of 1:25. For example, fill a five litre jerrycan with five litres of gasoline and add 200ml of oil.
Turn in the L-needle until the engine no longer takes on gas, then turn it on until it picks up gas, also abruptly.
If necessary, screw in H-needle, align with spark plug combustion image.

Spark combustion image:
White: Engine setting too lean: Danger Engine damage! - make it fatter.
Brown: optimally adjusted engine.
Black: Too fat. Tip: In very hot temperatures, drive with a fatter attitude, so as not to risk engine damage.

Important note at the end:
Once a petrol engine has been set, it will always run, if not the cause could be dirt in the carburettor or defective ignition or slipped ignition, never the carburettor setting.

MAINTENANCE

To ensure optimal operation and a long service life of the model, it is necessary to perform maintenance and functional checks.
Engine vibrations and shocks during driving can cause parts and screw connections to come loose.

For this reason, check before each use:

- The seizing of all screw connections and wheel nuts.
- The seat and condition of the air filter and fuel lines.
- The charge status of the transmitter batteries and receiver battery

Check the model for damage before each use. If you notice any damage, the vehicle must not be used.

CLEANING

Clean the entire vehicle after driving. Remove dust and dirt. Use e.g. a long-haired brush or cleaning brush and a vacuum cleaner. You can also use compressed air.

All ball bearings or gearboxes in the vehicle are provided with suitable lubricants by the manufacturer. As a rule, no relubrication is required. However, the joints on the vehicle and the wheel bearings require, depending on the use of the vehicle occasional, re-lubrication with low-viscosity machine oil or dry grease (recommended). The same applies when exchanging drive parts or gears.

Contaminants must not get into the tank or the carburettor and / or certainly not into the engine. It could damage the motor.

To avoid corrosion, add a few drops of machine oil to the engine in case of a long break in use.

Clean the air filter regularly. Use simple soap or detergent for the filter mats and then wash them well. After drying, apply a few drops of air filter oil to the inner mat and massage well.

TROUBLESHOOTING

Error	Cause	Solution
Transmitter not working	Transmitter batteries are empty.	Replace batteries or charge if rechargeable batteries.
	Batteries are inserted incorrectly	Insert the batteries correct
Range too low	Transmitter batteries are empty.	Replace batteries or charge if rechargeable batteries.
Servos do not respond properly	Transmitter batteries are empty.	Replace batteries or charge if rechargeable batteries.
	Servo gear broken	Replace the gear or the servo
Engine will not start	Defective spark plug	Replace spark plug
	Ignition coil slips	Check the seat of the ignition coil.
	Tank is empty	Fill the tank
	Fuel chamber of the carburetor is empty	Fill the chamber with pumps.
	Carburettor not adjusted correctly	Set the carburettor to factory settings.
	Combustion chamber full of fuel (flooded)	Unscrew the spark plug and pull starter several times until the combustion chamber is dry.
	Air is sucked in via fuel line or engine	Replace the fuel lines and check the location of the engine screws. Possibly seals must be renewed.
	Throttlek servo not set correctly	Move throttle servo to neutral position and readjust.
	Fuel line, air filter or exhaust blocked	Clean blocked parts, replace if necessary.
Engine gets no fuel	Screw on the carburetor completely screwed	Reset all screws on carburetor to factory settings.
	Fuel line kinked	Check the fuel lines
Engine starts, but goes out immediately	Tank is empty	Fill the tank
	Fuel line, air filter or exhaust blocked	Clean blocked parts, replace if necessary.
	Carburettor not adjusted correctly	Set the carburettor to factory settings.
Motor läuft nicht rund, spricht schlecht an	Dirty air filter	Clean the air filter
	Mixture too fat	Turn the adjusting screw leaner.
Motor wird zu heiß	Mixture too lean	Turn the adjusting screw fatter.

Brake is ineffective	Wrong adjusted brake linkage	Correct the adjustment of the brake linkage.
	Throttle / brake servo not properly trimmed	Check the trim of the throttle servo.
	Worn brake disk or brake shoes	Replace the brake discs or brake shoes.
Clutch does not work	Clutch jaws worn or defective	Replace the clutch
	Clutch bell defective	Replace the clutchbell
Clutch does not separate	Worn clutch shoes and welded with clutch bell.	Replace Clutch and Clutchbell
Car does not drive	Gear defective	Replace the gears
	Drive shafts defective	Replace drive shafts

FRONT DIFFERENTIAL INSTALLATION

1.

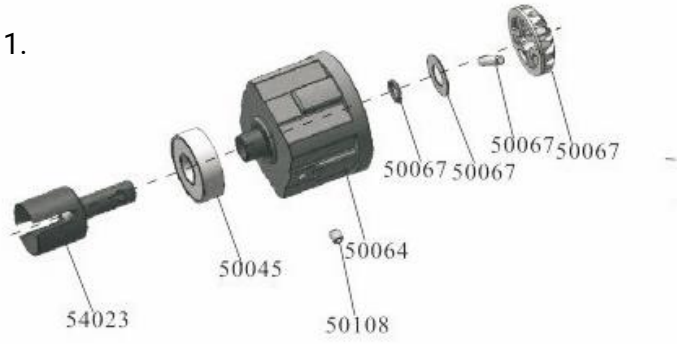

2.

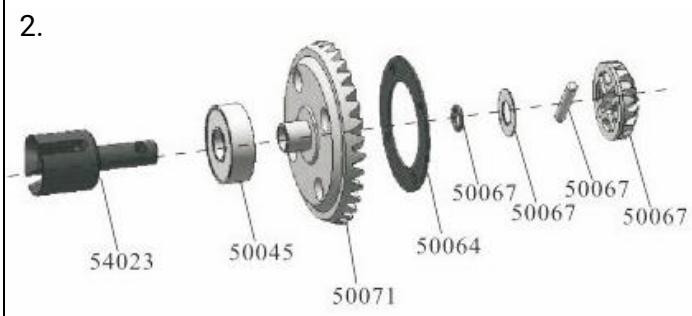

3.

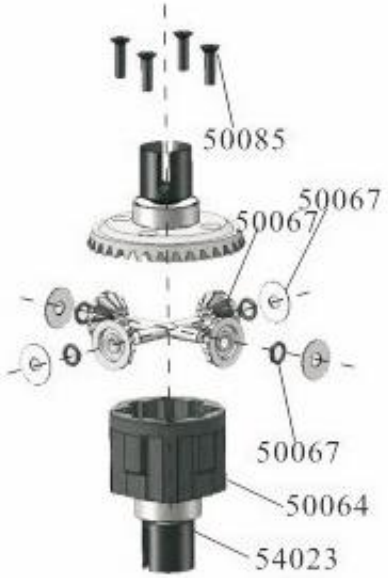

4.

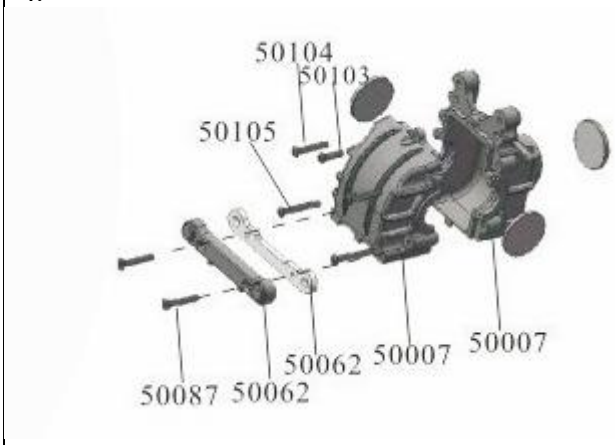

5.

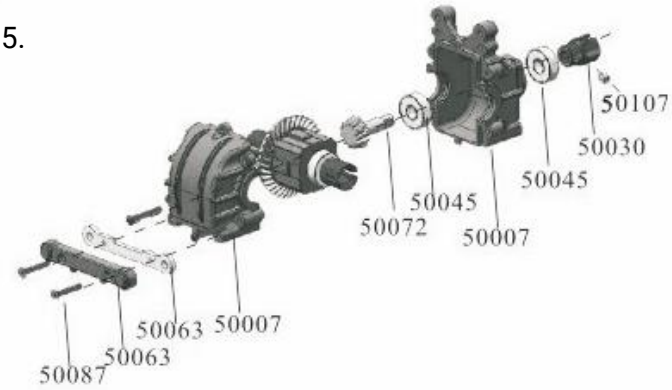

6.

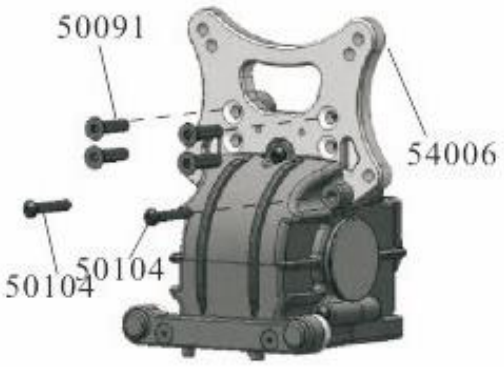

REAR DIFFERENTIAL INSTALLATION

1.

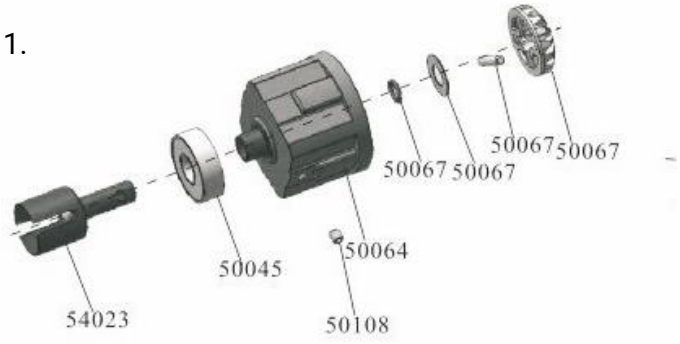

2.

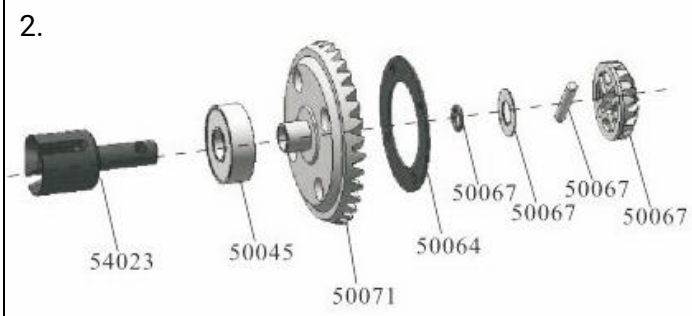

3.

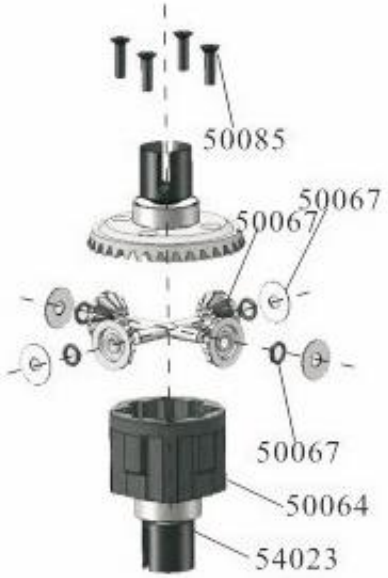

4.

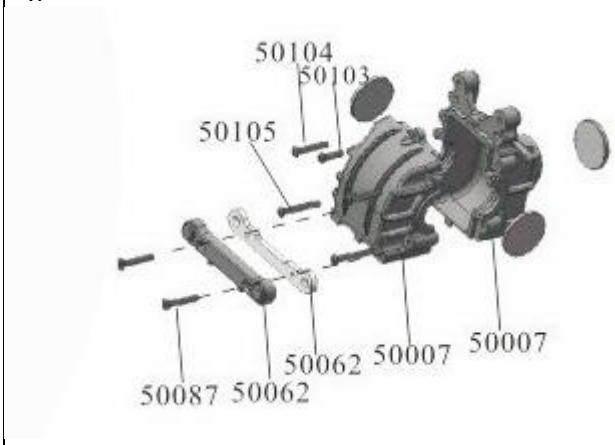

5.

6.

GEAR INSTALLATION

1.

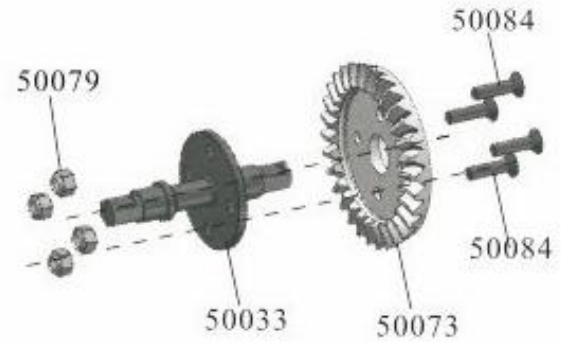

2.

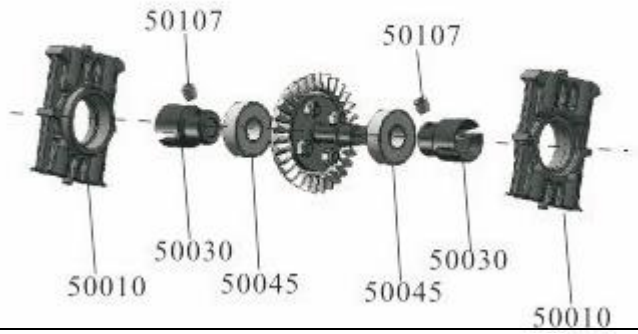

3.

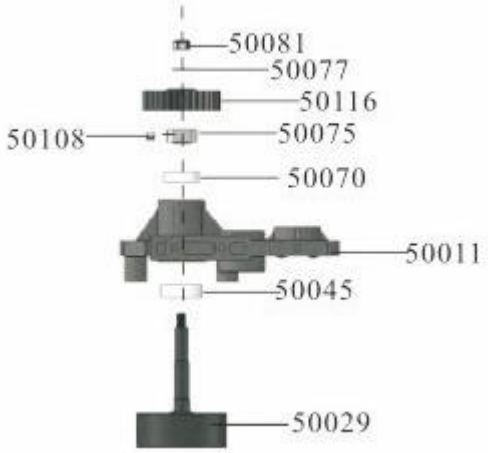

4.

5.

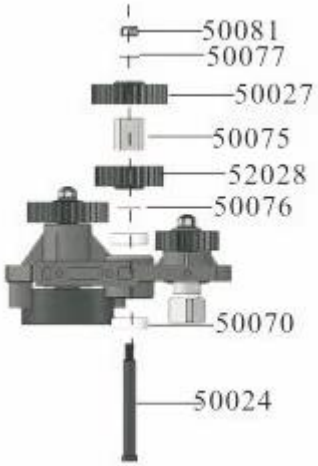

6.

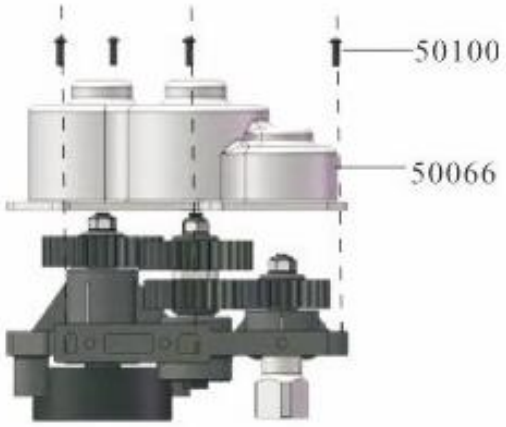

7.

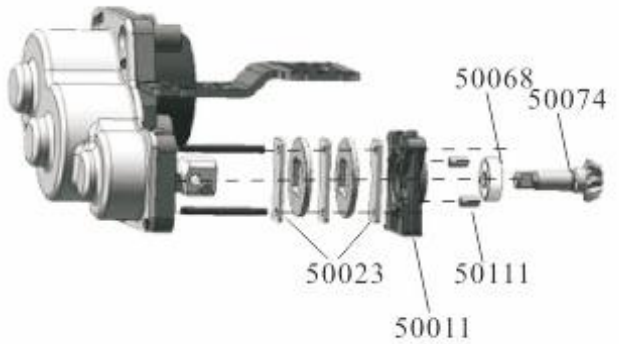

8.

9.

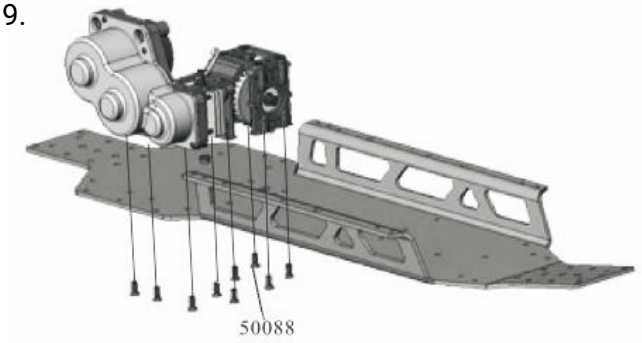

REAR AXLE INSTALLATION

1.

2.

3.

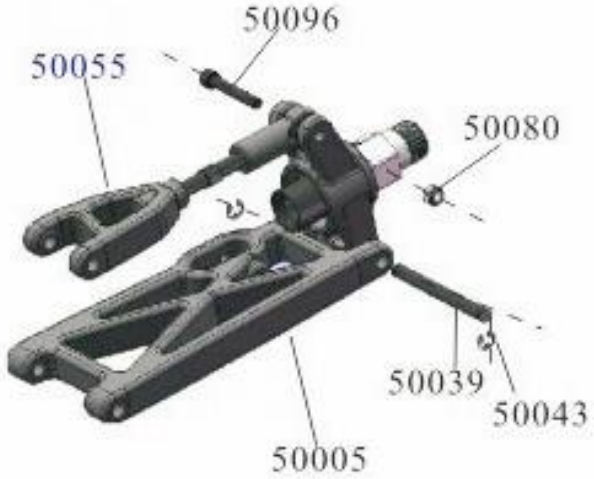
50096
50055
50080
50039
50043
50005

4.

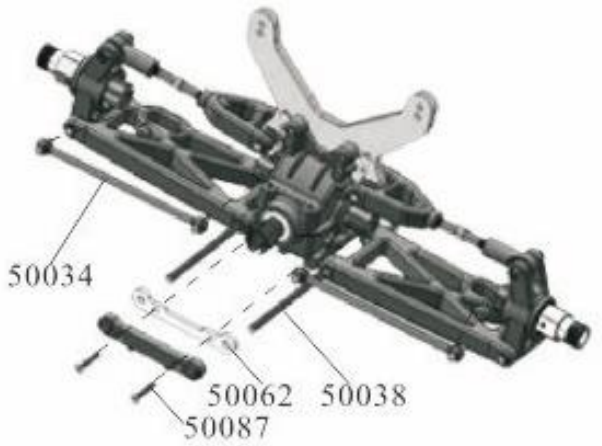
50034
50062
50038
50087

5.

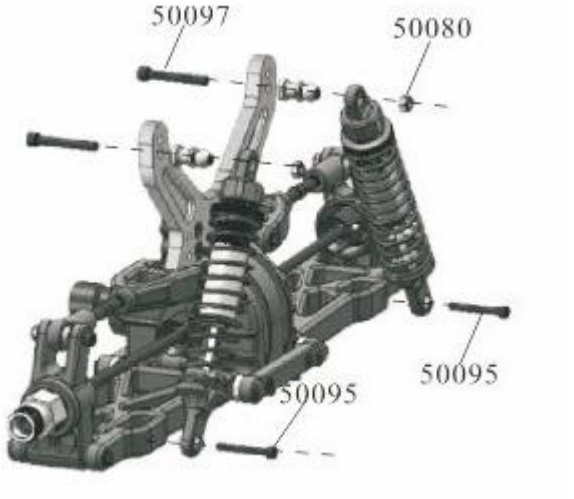
50097
50080
50095
50095

6.

50084
50089

7.

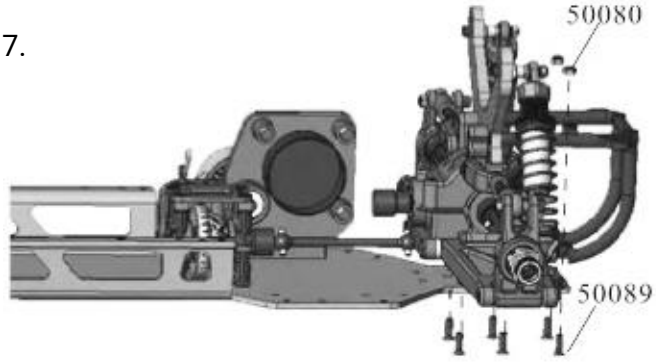
50080
50089

8.

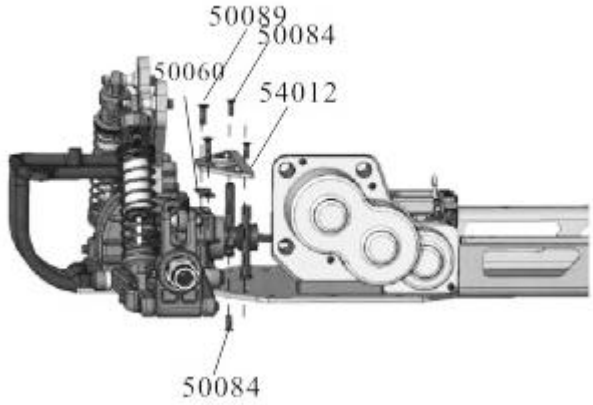
50089
50084
50060
54012
50084

ENGINE INSTALLATION

1.

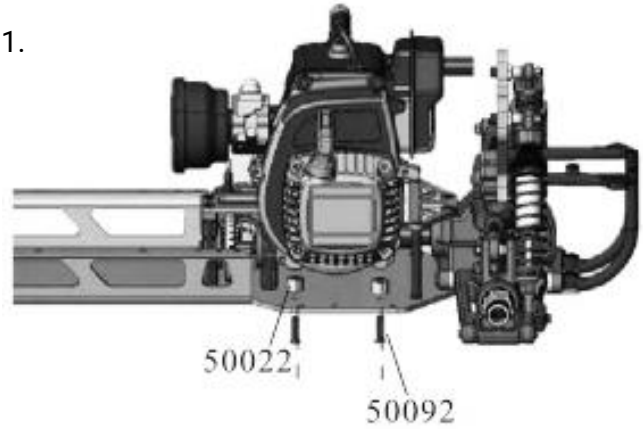

2.

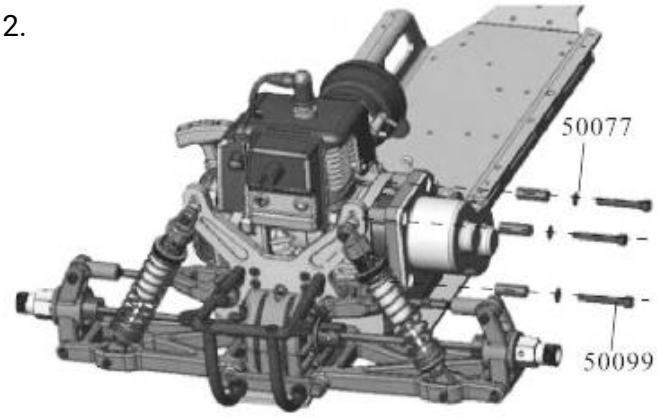

3.

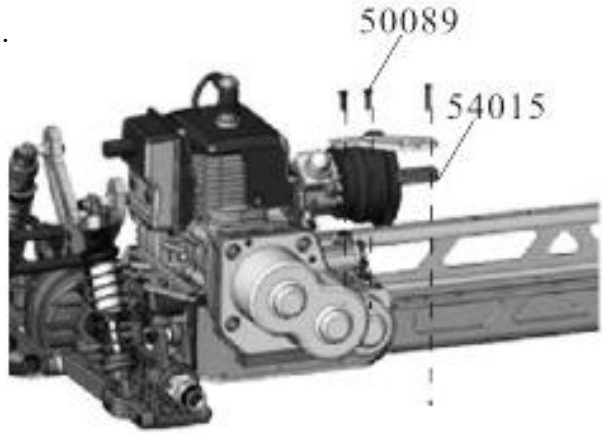

4.

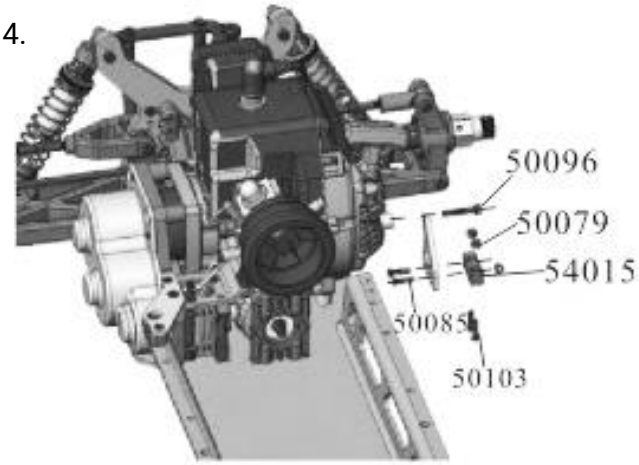

TANK INSTALLATION

1.

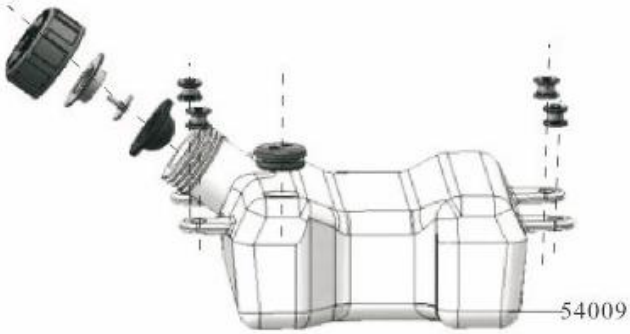

2.

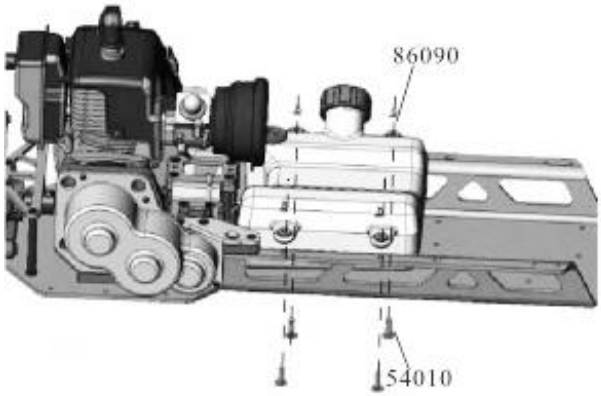

RECEIVERBOX INSTALLATION

1.

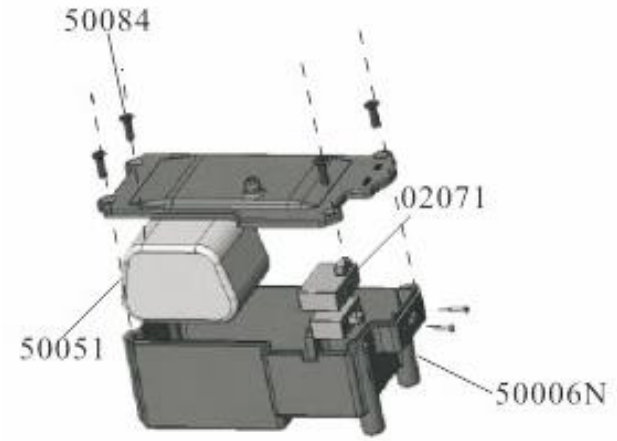

2.

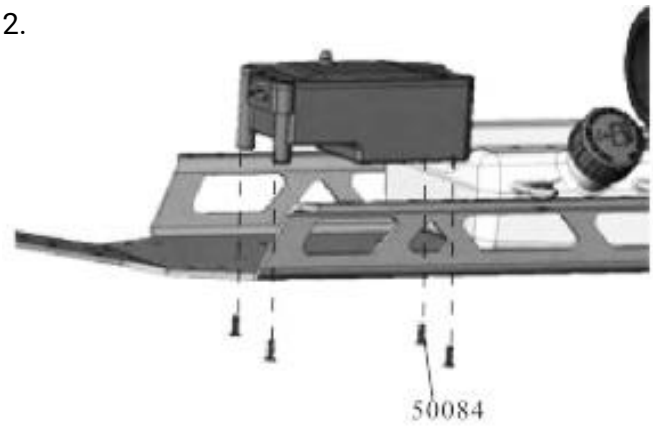

SERVO INSTALLATION

1.

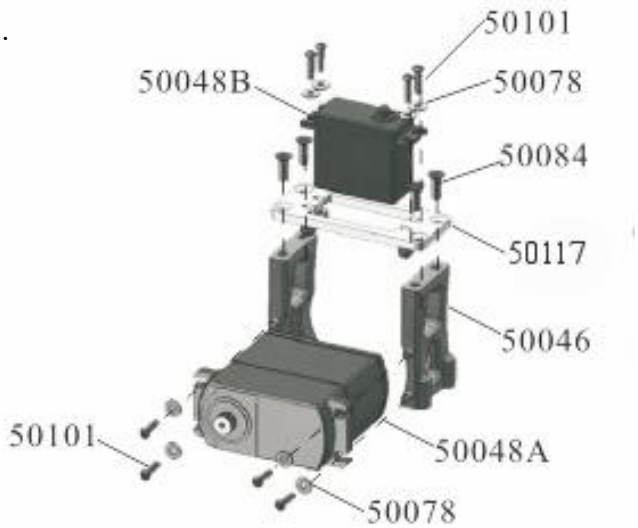

2.

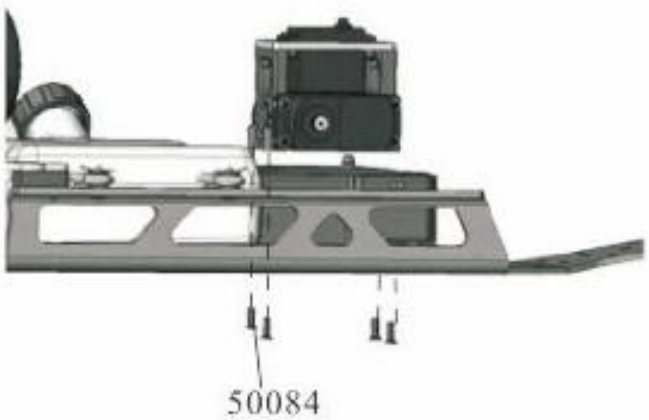

SERVOSAVER INSTALLATION

1.

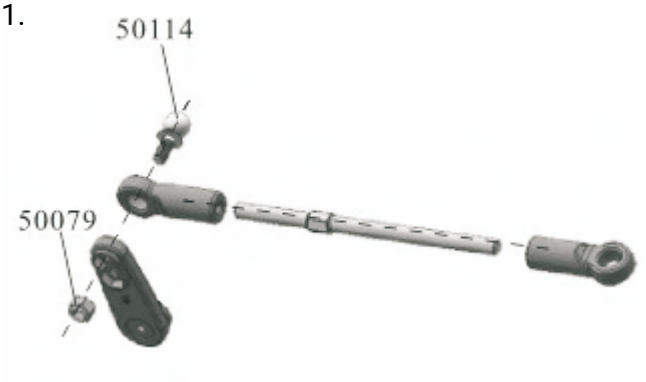

2.

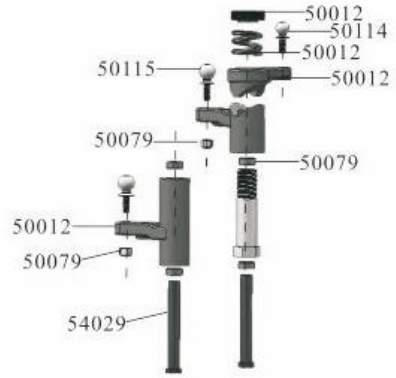

3.

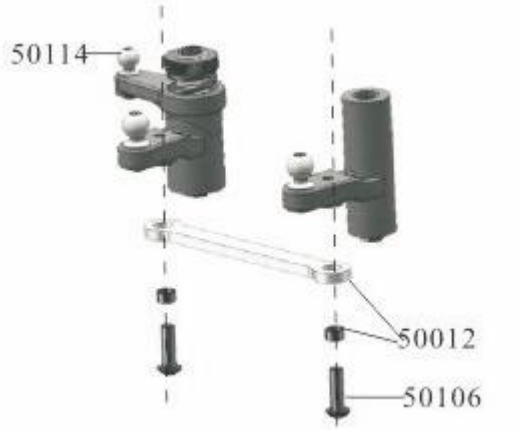

4.

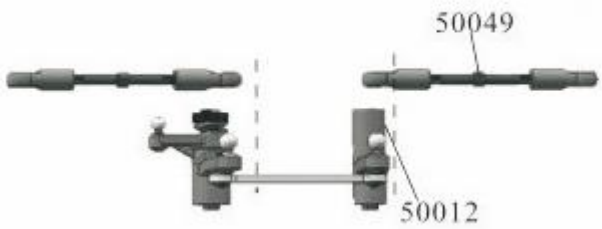

5.

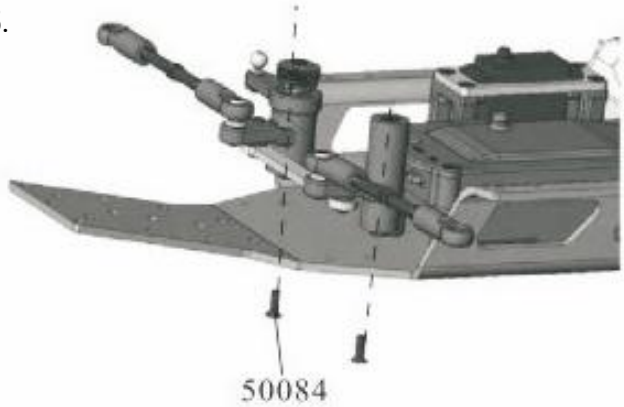

6.

FRONT AXLE INSTALLATION

1.

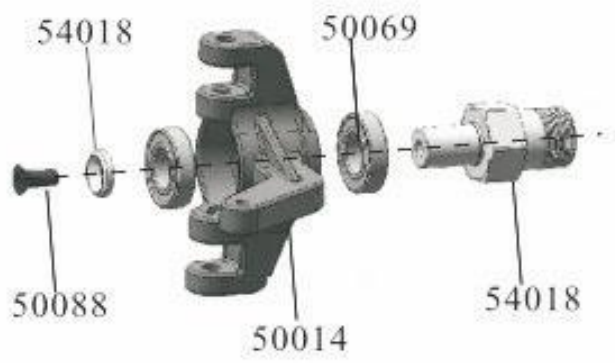

2.

3.

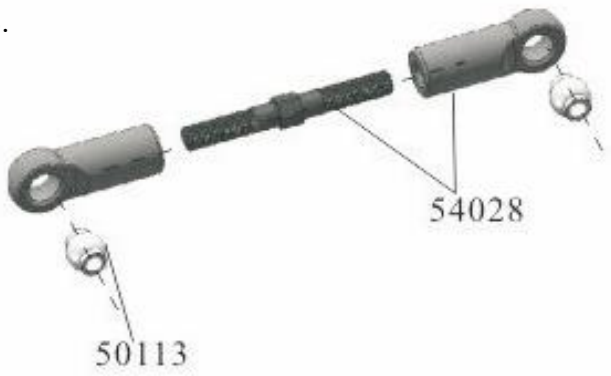

4.

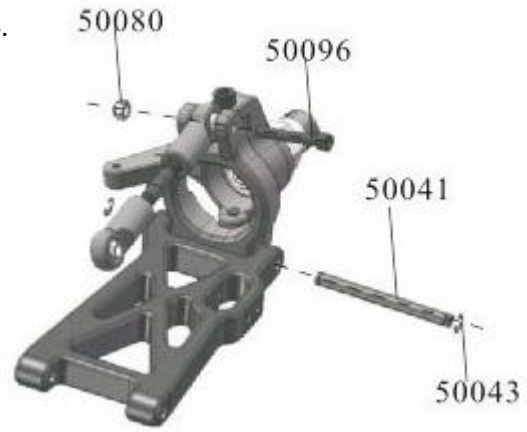

5.

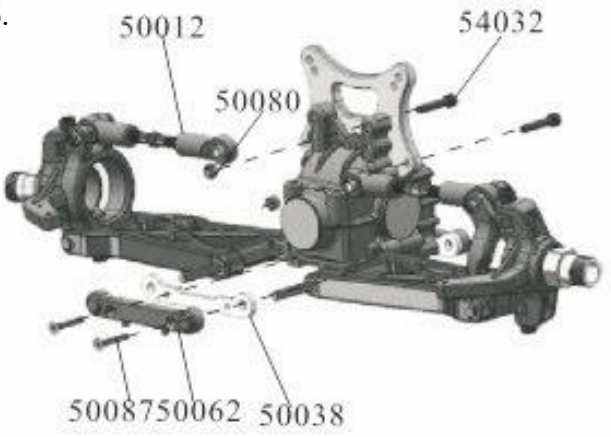

6.

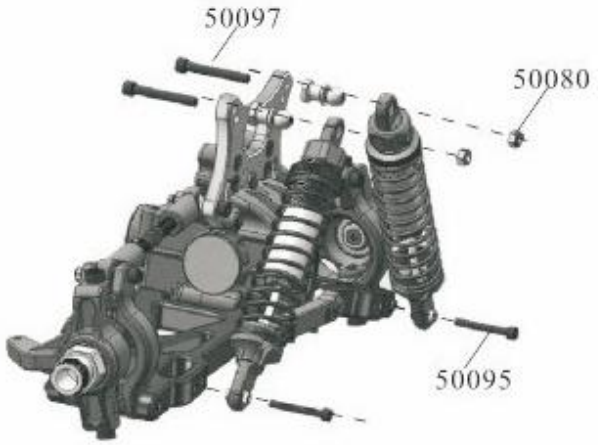

7.

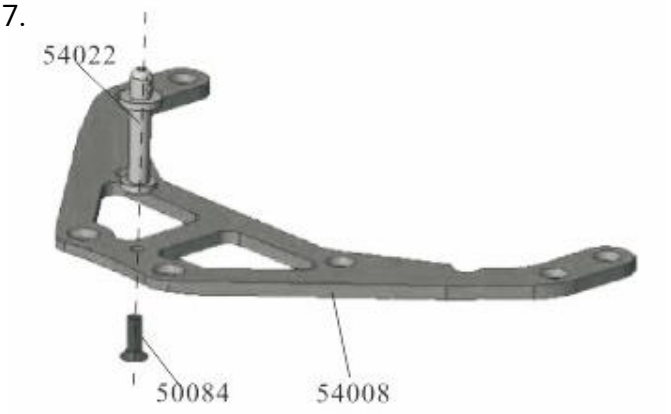

8.

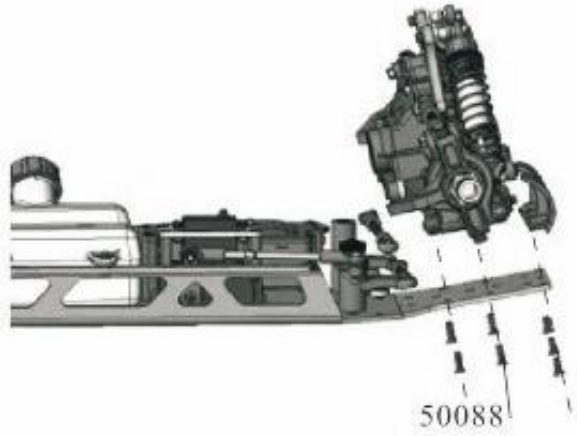

9.

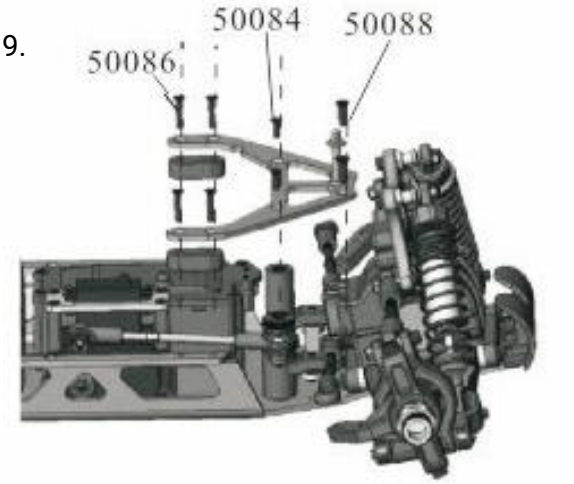

10.

ROLLCAGE INSTALLATION

1.

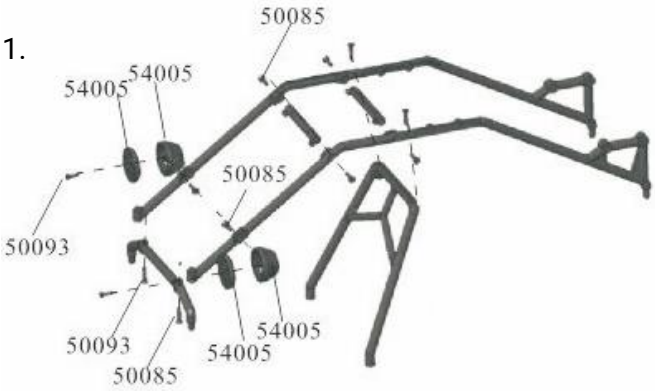

2.

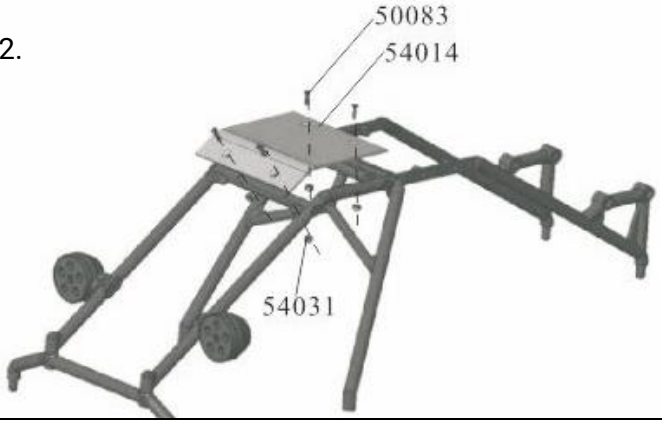

3.

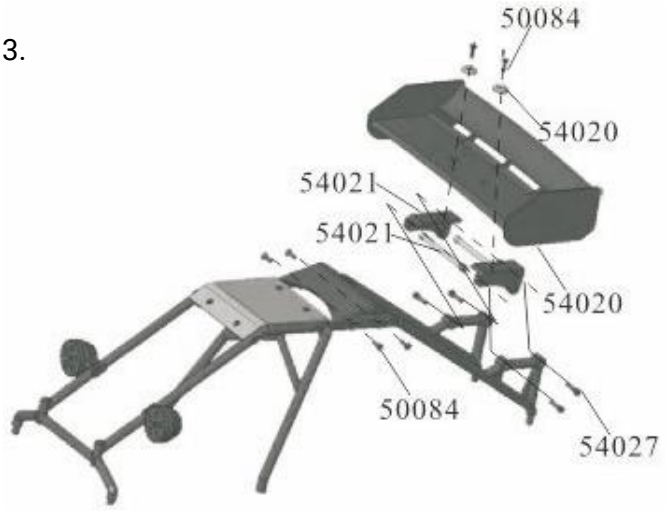

4.

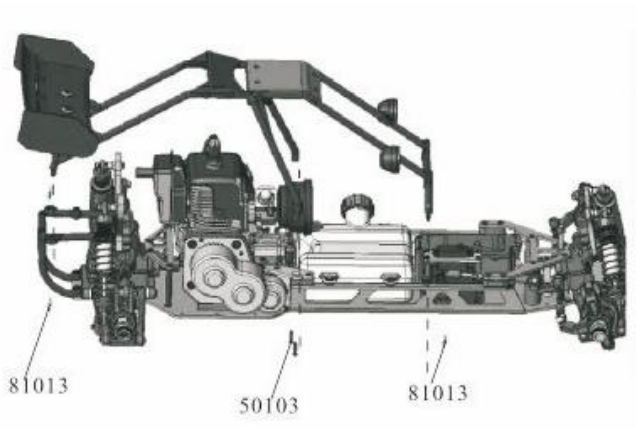

5.

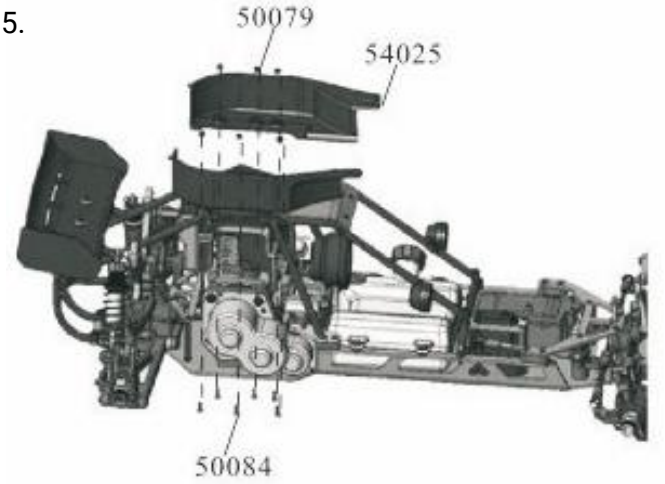

SPARE PARTS

Spare Parts you will find at https://amewi.com